CL.1 Deck-mounted basin spout without pop-up waste - Brushed Dark Platinum

13 714 705 Product version from 6/15/2021

- 160mm projection
- fixed spout
- rectangular spray pattern with 40 individual jets
- height of mixer 108 mm
- height up to aerator 94 mm
- hole diameter 35 mm
- 2x screw-in M 10 x 1 pressure hose, leak-tested
- 1/2" connection
- max. flow 4 l/min
- lead-free
- This product can help a building meet the requirements of Green Building Rating Systems, e.g. LEED®, BREEAM®, DGNB
- WRAS

Brushed Dark Platinum	13 714 705-99
Chrome	13 714 705-00
Brushed Platinum	13 714 705-06
Dark Chrome	13 714 705-19
Brushed Champagne (22kt Gold)	13 714 705-46
Champagne (22kt Gold)	13 714 705-47

CL.1 Deck-mounted basin spout without pop-up waste - Brushed Dark Platinum

13 714 705 Product version from 6/15/2021

mm [inches]

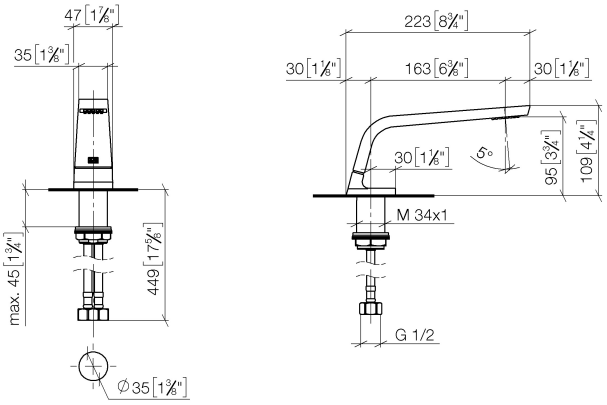

Flow rate chart

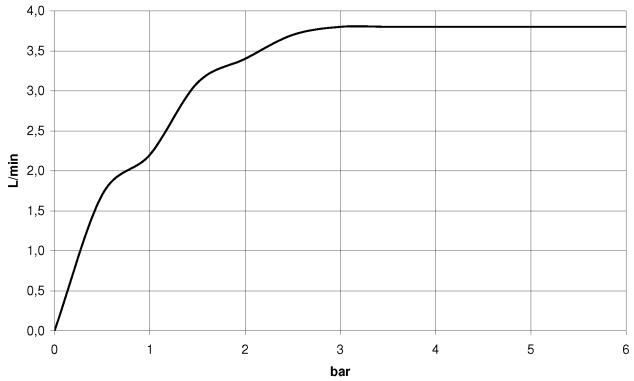

Codes & Standards

DIN 4109	EPA WaterSense	Executive Order no. 1007	ISO 3822
NSF372	NSF61	Scottish Water Byelaws	UK Water Supply Regulations
Ü-Zeichen	WaterSense		

CL.1 Deck-mounted basin spout without pop-up waste - Brushed Dark Platinum

13 714 705 Product version from 6/15/2021

Certificates

GDV_0400	LGA_28	IAPMO_N-4	IAPMO_8834	WRAS_1512
IAPMO_6				

We reserve the right to change designs, product range and technical specifications without prior notice.
More information can be found at: www.dornbracht.com +49 (0) 2371 8899 900 mail@dornbracht.com

CL.1 Deck-mounted basin spout without pop-up waste - Brushed Dark Platinum

13 714 705 Product version from 6/15/2021

Parts for other finishes can be found here: Chrome

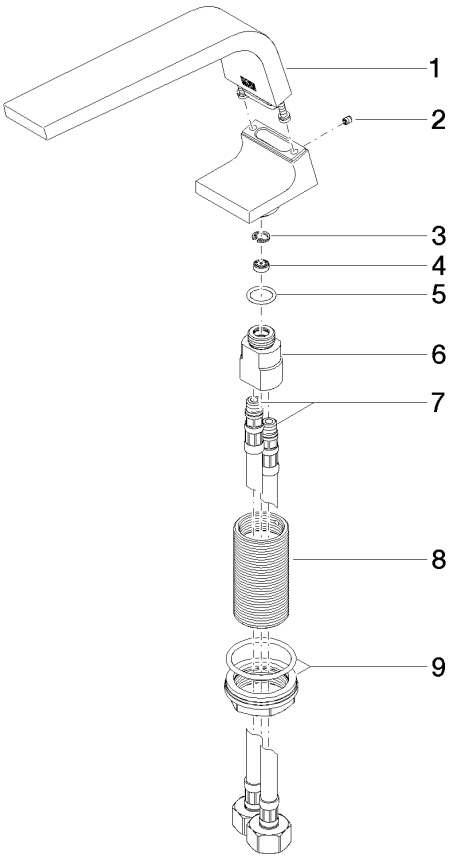

Spare parts list

No.	Item Number	Name	Quantity used	Delivery time
1	90 11 70 002 00-99	spout	1	30
2	09 31 11 044 90	pin	1	2
3	09 16 01 016 90	ring	1	2
4	09 23 01 034 90	flow reducer	1	2
5	09 14 10 130 90	seal	1	2
6	09 11 10 055 10 90	connection	1	2
7	04 30 04 019 00 90	hose	2	2
8	09 30 01 208 90	connection	1	2
9	04 23 10 044 06 90	fixing set	1	2

We reserve the right to change designs, product range and technical specifications without prior notice.
More information can be found at: www.dornbracht.com +49 (0) 2371 8899 900 mail@dornbracht.com